TOPLESS (Medium)

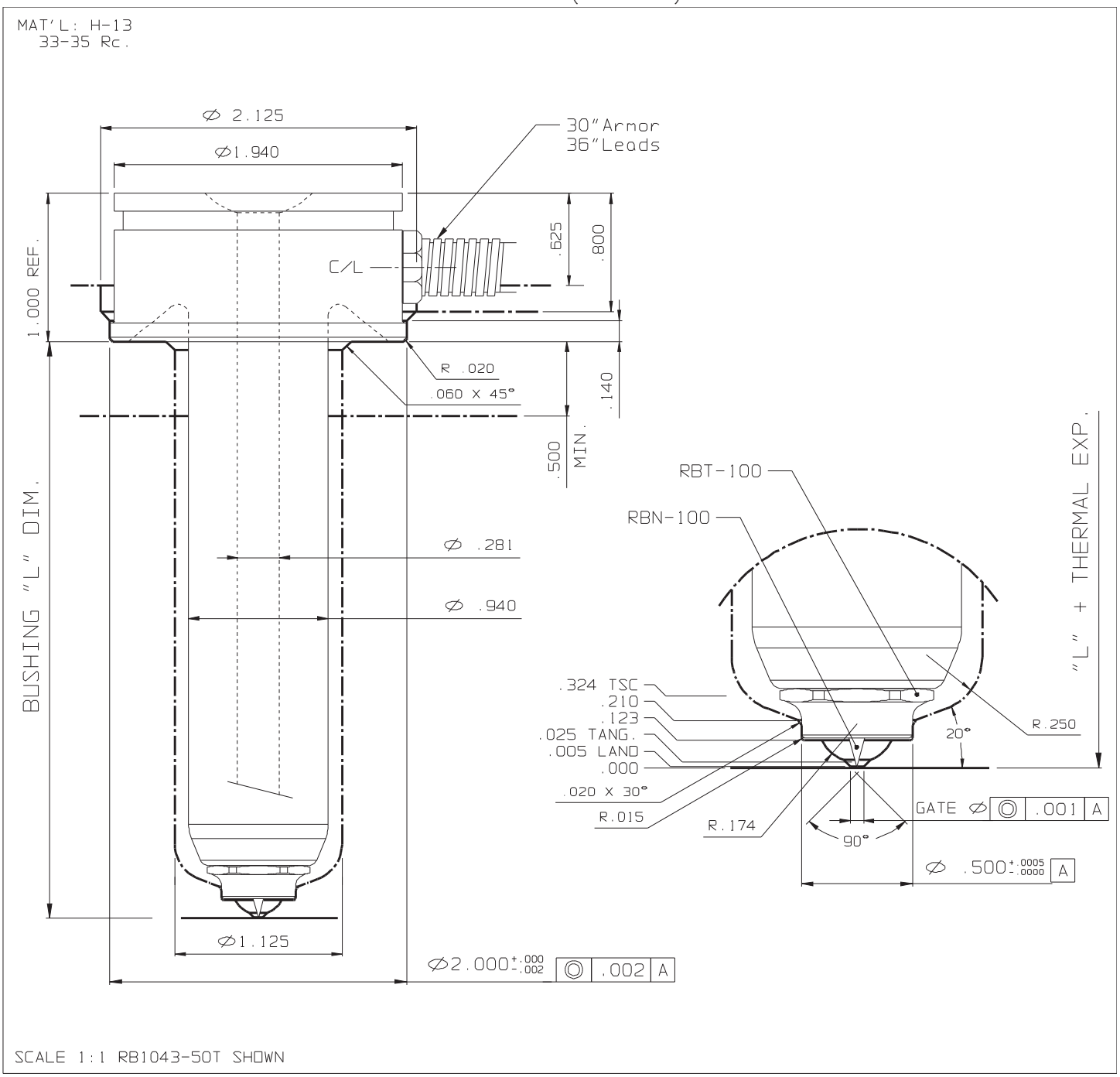

STANDARD SIZES					(240 V)	
L	½ SPH. RAD.	¾ SPH. RAD.	FLAT TYPE	MAN. TYPE	Watts	T/C
1.875	RB1023-50T	RB1023-75T	RB1023-38T	RB1023-68T	345	J2-06
2.375	RB1027-50T	RB1027-75T	RB1027-38T	RB1027-68T	365	J2-06
2.875	RB1033-50T	RB1033-75T	RB1033-38T	RB1033-68T	395	J2-06
3.375	RB1037-50T	RB1037-75T	RB1037-38T	RB1037-68T	440	J2-06
3.875	RB1043-50T	RB1043-75T	RB1043-38T	RB1043-68T	460	J2-10
4.375	RB1047-50T	RB1047-75T	RB1047-38T	RB1047-68T	485	J2-10
4.875	RB1053-50T	RB1053-75T	RB1053-38T	RB1053-68T	510	J2-10
5.375	RB1057-50T	RB1057-75T	RB1057-38T	RB1057-68T	535	J2-10
5.875	RB1063-50T	RB1063-75T	RB1063-38T	RB1063-68T	560	J2-10
6.375	RB1067-50T	RB1067-75T	RB1067-38T	RB1067-68T	585	J2-10
6.875	RB1073-50T	RB1073-75T	RB1073-38T	RB1073-68T	610	J2-10
7.375	RB1077-50T	RB1077-75T	RB1077-38T	RB1077-68T	635	J2-10
7.875	RB1083-50T	RB1083-75T	RB1083-38T	RB1083-68T	660	J2-14
8.375	RB1087-50T	RB1087-75T	RB1087-38T	RB1087-68T	685	J2-14
8.875	RB1093-50T	RB1093-75T	RB1093-38T	RB1093-68T	710	J2-14
9.375	RB1097-50T	RB1097-75T	RB1097-38T	RB1097-68T	735	J2-14

OPTIONS	
END CAPS	NEEDLE
RBT-100	RBN-100

A replaceable T/C is installed with each bushing.

NOTE: The floating needle has been incorporated, but nozzle thermal expansion must be considered. Orifice must be adjusted to suit.