THROUGH TIP (Medium)

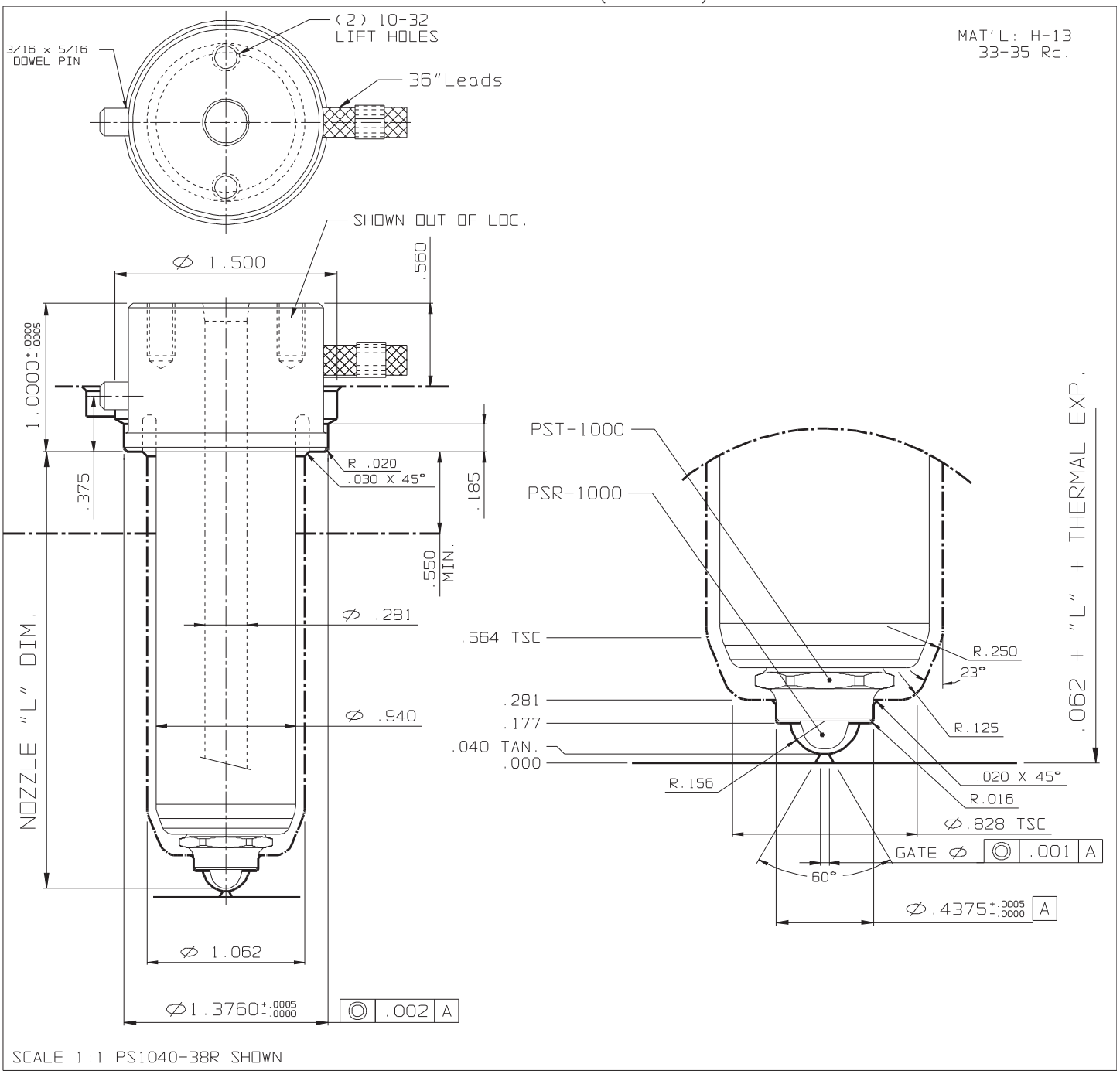

NOZZLE #			(220V)		THERMAL EXPANSION ΔL @ (°F)			
L	FLAT TYPE	O-RING TYPE	WATTS	T/C	370°F	460°F	550°F	640°F
1.950	PS1030-38R	PS1030-68R	355	J2-06	0.004	0.006	0.007	0.009
2.450	PS1035-38R	PS1035-68R	415	J2-06	0.005	0.007	0.009	0.010
2.950	PS1040-38R	PS1040-68R	470	J2-10	0.006	0.008	0.010	0.012
3.450	PS1045-38R	PS1045-68R	530	J2-10	0.007	0.010	0.012	0.014
3.950	PS1050-38R	PS1050-68R	590	J2-10	0.008	0.011	0.014	0.016
4.450	PS1055-38R	PS1055-68R	590	J2-10	0.009	0.012	0.015	0.018
4.950	PS1060-38R	PS1060-68R	610	J2-10	0.010	0.014	0.017	0.020
5.450	PS1065-38R	PS1065-68R	660	J2-10	0.011	0.015	0.019	0.022
5.950	PS1070-38R	PS1070-68R	710	J2-10	0.012	0.016	0.020	0.024

OPTIONS	
END CAP	GATE Ø
PST-1000	.030-.060

GATING NEEDLES
PSR-1000