FLAT NOZZLE

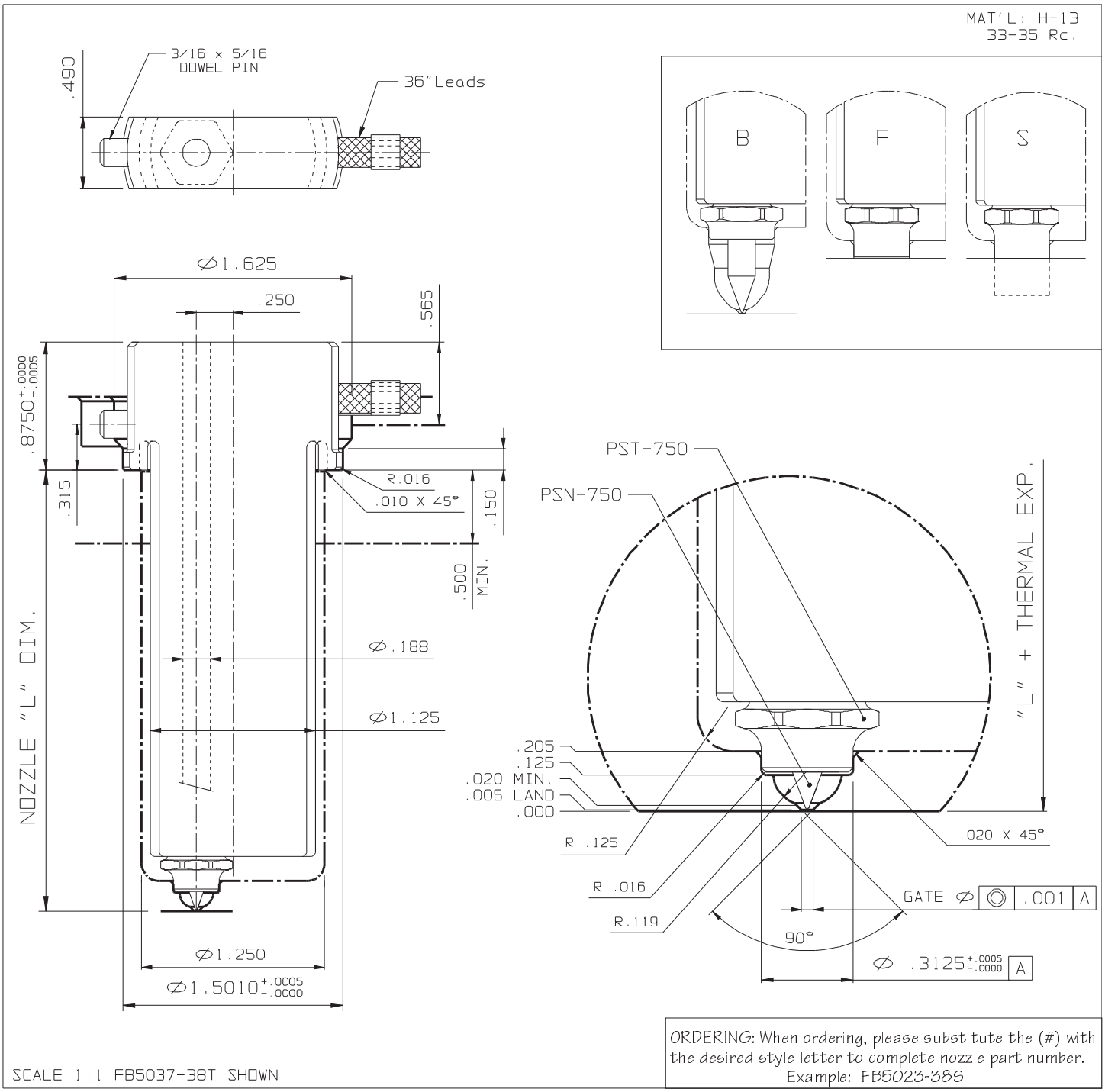

SCALE 1:1 FB5037-38T SHOWN

ORDERING: When ordering, please substitute the (#) with the desired style letter to complete nozzle part number.
Example: FB5023-38S

NOZZLE #			(220V)	THERMAL EXPANSION ΔL @ (°F)			
L	FLAT TYPE	WATTS	T/C	370°F	460°F	550°F	640°F
1.500	FB5023-38(#)	350	J2-06	0.003	0.005	0.006	0.007
2.000	FB5027-38(#)	370	J2-06	0.004	0.006	0.007	0.009
2.500	FB5033-38(#)	420	J2-06	0.005	0.007	0.009	0.011
3.000	FB5037-38(#)	450	J2-06	0.006	0.009	0.011	0.013
3.500	FB5043-38(#)	450	J2-10	0.007	0.010	0.012	0.015
4.000	FB5047-38(#)	500	J2-10	0.008	0.011	0.014	0.016
4.500	FB5053-38(#)	500	J2-10	0.009	0.013	0.016	0.018
5.000	FB5057-38(#)	500	J2-10	0.010	0.015	0.017	0.021
5.500	FB5063-38(#)	550	J2-10	0.011	0.016	0.019	0.023
6.000	FB5067-38(#)	550	J2-10	0.012	0.017	0.021	0.025

OPTIONS	
END CAP	GATE Ø
PST-750	.030 - .060

GATING NEEDLES	
UNFILLED MAT'LS	REINFORCED MAT'LS
PSN-750	PSN-760